Hitachi Power Tools

LIST NO. G866

ELECTRIC TOOL PARTS LIST

■ CORDLESS DISC GRINDER

2007・6・11

Model G 14DL

(E1)

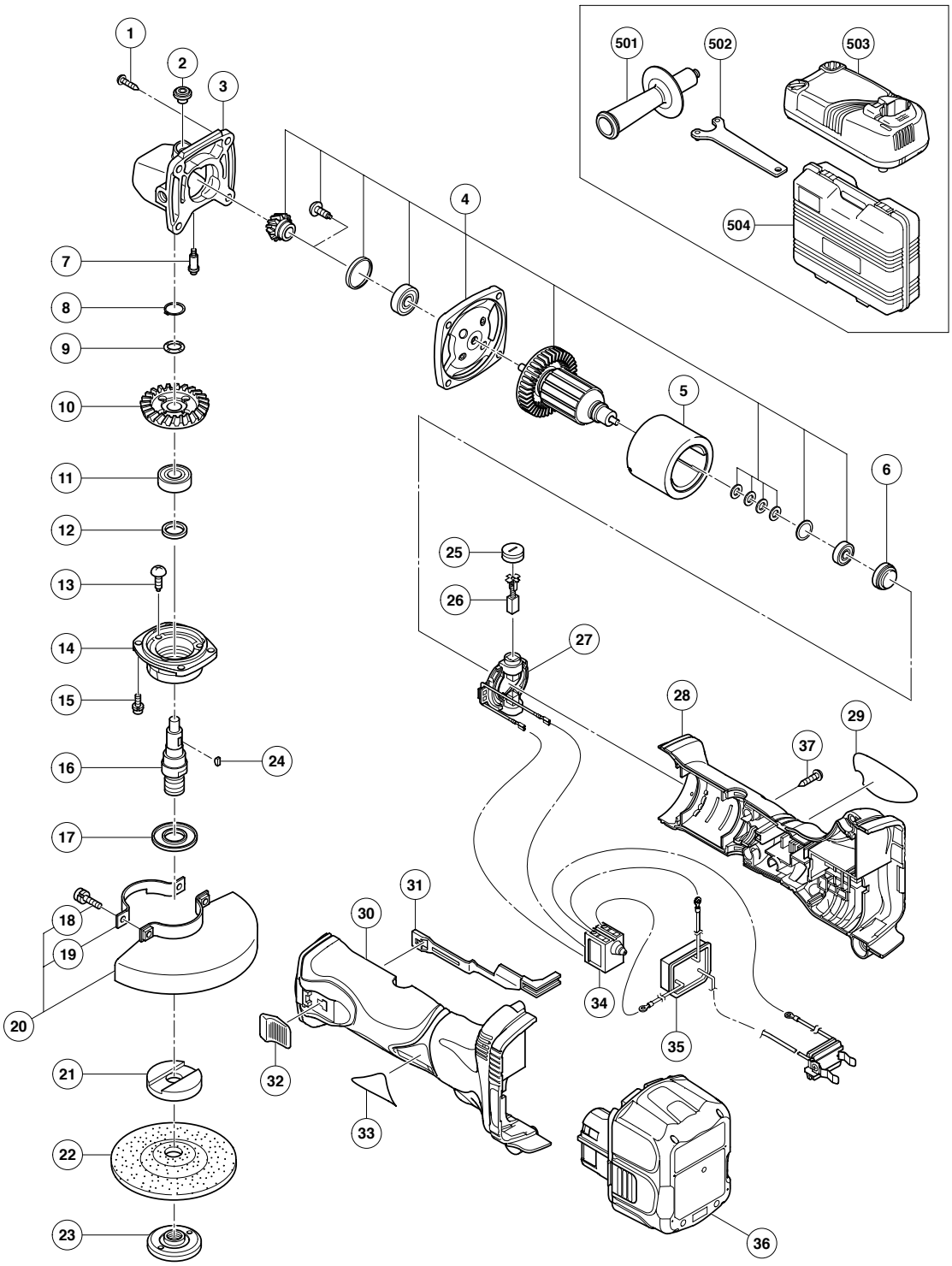

	ITEM NO.	CODE NO.	DESCRIPTION	NO. USED	REMARKS	
	1	328-643	TAPPING SCREW (W/FLANGE) D4X23 (BLACK)	4		
	2	301-944	PUSHING BUTTON	1		
	3	303-078	GEAR COVER ASS'Y	1	INCLUD. 2, 7	
	4	360-803	ARMATURE AND PINION SET	1		
	5	328-195	MAGNET	1		
	6	328-201	RUBBER BUSHING	1		
	7	301-943	LOCK PIN	1		
	8	316-487	RETAINING RING FOR D11 SHAFT	1		
	9	316-486	WAVE WASHER	1		
	10	328-196	GEAR	1		
	11	600-1VV	BALL BEARING 6001VVCMPS2L	1		
	12	301-946	FELT PACKING	1		
	13	301-936	SLOTTED HD. SCREW (SEAL LOCK) M4X10	3		
	14	328-198	PACKING GLAND	1		
	15	307-127	SEAL LOCK SCREW (W/SP. WASHER) M4X12	4		
*	16	328-359	SPINDLE M14	1		
*	16	328-360	SPINDLE 5/8"-11UNC	1	FOR USA, CAN	
	17	301-945	FRINGER	1		
	18	308-386	MACHINE SCREW (W/SP. WASHER) M5X16 (BLACK)	2		
	19	301-949	SET PLATE	1		
	20	315-492	WHEEL GUARD ASS'Y	1	INCLUD. 18, 19	
*	21	937-817Z	WHEEL WASHER	1		
*	21	319-373	WHEEL WASHER	1	FOR USA, CAN	
	22	316-821	D. C. WHEELS 115MM A36Q (25 PCS.)	1		
*	23	994-324	WHEEL NUT M14	1		
*	23	937-923P	WHEEL NUT 5/8"-11UNC	1	FOR USA, CAN	
	24	302-047	WOODRUFF KEY	1		
	25	328-200	BRUSH CAP	2		
	26	999-054	CARBON BRUSH 5X6X11.5 (1 PAIR)	2		
	27	328-202	BRUSH BLOCK	1		
	28	328-355	HOUSING (D)	1		
	29		NAME PLATE	1		
	30	328-354	HOUSING (C)	1		
	31	328-199	SLIDE BAR	1		
	32	314-428	SLIDE KNOB	1		
	33		HITACHI LABEL	1		
	34	319-319	PUSHING BUTTON SWITCH	1		
	35	328-658	CONTROLLER TERMINAL SET	1		
*	36	326-824	BATTERY BCL 1430 (EUROPE, AUS, NZL)	2		
*	36	326-823	BATTERY BCL 1430 (USA, CAN)	1		
	37	301-653	TAPPING SCREW (W/FLANGE) D4X20 (BLACK)	5		

* ALTERNATIVE PARTS

STANDARD ACCESSORIES

ITEM NO.	CODE NO.	DESCRIPTION	NO. USED	REMARKS	
501	318-312	SIDE HANDLE	1		
502	938-332Z	WRENCH	1		
503		CHARGER (MODEL UC 18YRL)	1		
504	328-206	CASE	1		

OPTIONAL ACCESSORIES

	ITEM NO.	CODE NO.	DESCRIPTION	NO. USED	REMARKS	
*	601	937-826Z	WASHER NUT	1		
*	601	938-318	WASHER NUT	1	FOR USA, CAN	
*	602	937-825Z	RUBBER PAD	1		
*	602	938-317	RUBBER PAD	1	FOR USA, CAN	
	603	314-095	SANDING DISCS 115MM C-P16 (10 PCS.)	1		
	604	314-096	SANDING DISCS 115MM C-P20 (10 PCS.)	1		
	605	314-097	SANDING DISCS 115MM C-P24 (10 PCS.)	1		
	606	314-098	SANDING DISCS 115MM C-P30 (10 PCS.)	1		
	607	314-099	SANDING DISCS 115MM C-P36 (10 PCS.)	1		
	608	314-100	SANDING DISCS 115MM C-P40 (10 PCS.)	1		
	609	314-101	SANDING DISCS 115MM C-P50 (10 PCS.)	1		
	610	314-102	SANDING DISCS 115MM C-P60 (10 PCS.)	1		
	611	314-103	SANDING DISCS 115MM C-P80 (10 PCS.)	1		
	612	314-104	SANDING DISCS 115MM C-P100 (10 PCS.)	1		
	613	314-105	SANDING DISCS 115MM C-P120 (10 PCS.)	1		
*	614	310-338	SUPER WASHER	1	EXCEPT FOR USA, CAN	

* ALTERNATIVE PARTS

ITEM NO.	CODE NO.	DESCRIPTION	NO. USED	REMARKS	