Hitachi Power Tools

LIST NO. G870

ELECTRIC TOOL PARTS LIST

■ CORDLESS BLOWER

2007・6・15

Model RB 14DL

(E1)

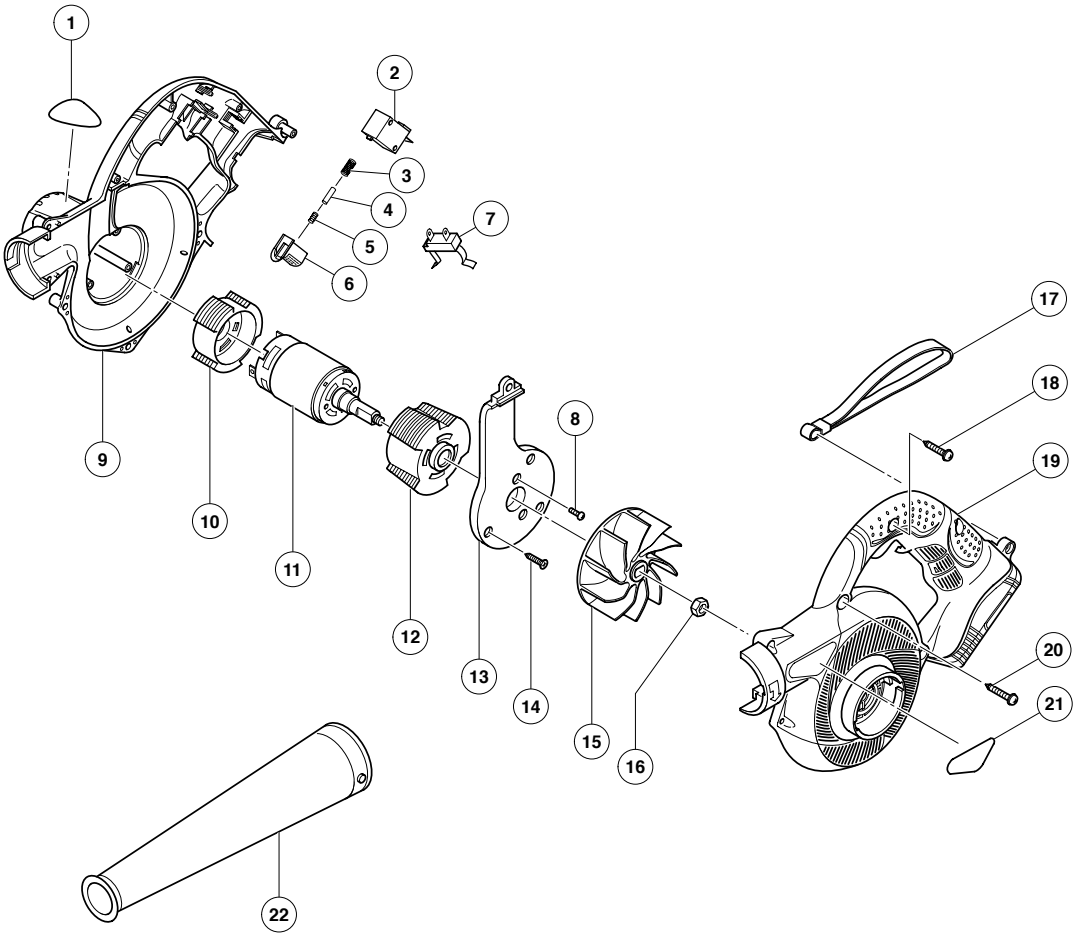

PARTS

RB 14DL

ITEM NO.	CODE NO.	DESCRIPTION	NO. USED	REMARKS	
1		NAME PLATE	1		
2	328-612	MICRO SWITCH	1		
3	328-613	SWITCH SPRING (B)	1		
4	328-654	SWITCH BAR	1		
5	328-655	SWITCH SPRING (A)	1		
6	328-614	SWITCH KNOB	1		
7	328-611	BATTERY HOLDER	1		
8	949-216	MACHINE SCREW M4X10 (10 PCS.)	2		
9	328-610	HOUSING (R)	1		
10	328-560	MOTOR HOLDER (B)	1		
11	328-561	MOTOR (W/SPINDLE)	1		
12	328-553	MOTOR HOLDER (A)	1		
13	328-563	MOTOR PLATE	1		
14	328-550	TAPPING SCREW D3.5X15	3		
15	328-564	FAN	1		
16	949-556	NUT M6 (10 PCS.)	1		
17	328-565	STRAP	1		
18	328-546	TAPPING SCREW D3.5X15 (BLACK)	8		
19	328-609	HOUSING (L)	1		
20	328-549	TAPPING SCREW D3.5X20 (BLACK)	1		
21		HITACHI LABEL	1		
22	328-562	NOZZLE	1		

OPTIONAL ACCESSORIES

ITEM NO.	CODE NO.	DESCRIPTION	NO. USED	REMARKS	
601	317-124	LONG NOZZLE ASS'Y	1		
602	323-587	DUST BAG (DEEP BLUE)	1		
603	990-046	NOZZLE (B)	1		

* ALTERNATIVE PARTS

Printed in Japan 6 – 07
(070615N)